REV	DESCRIPTION	DATE	APPROVED
03	HEIGHT UPDATE	06.05.2024	Y.SH.

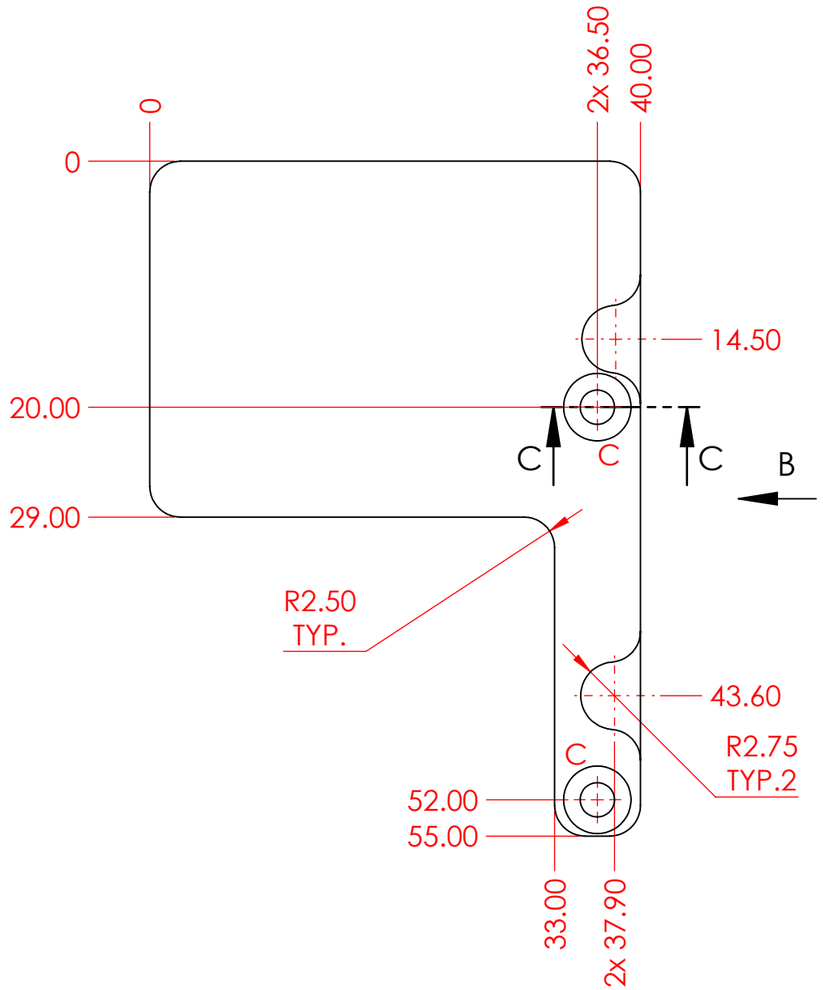

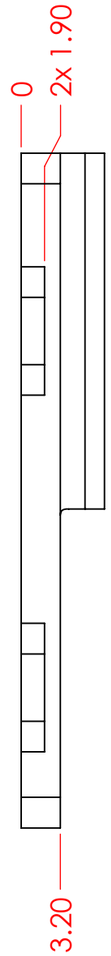

VIEW B

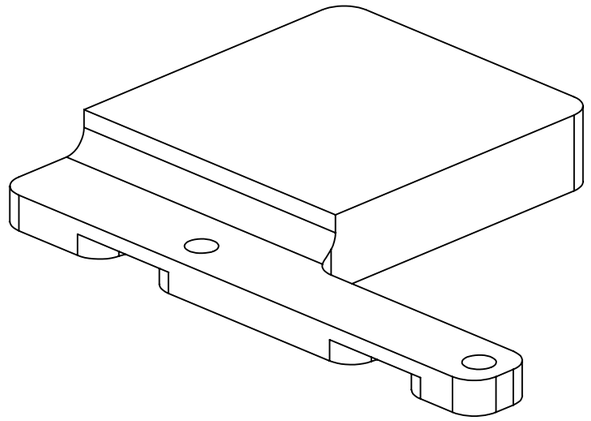

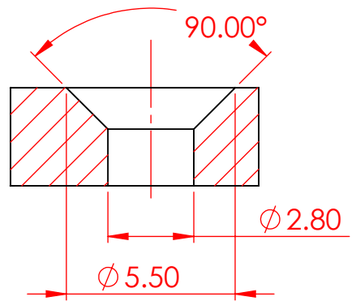

SECTION C-C
TYP.2, MARKED "C"

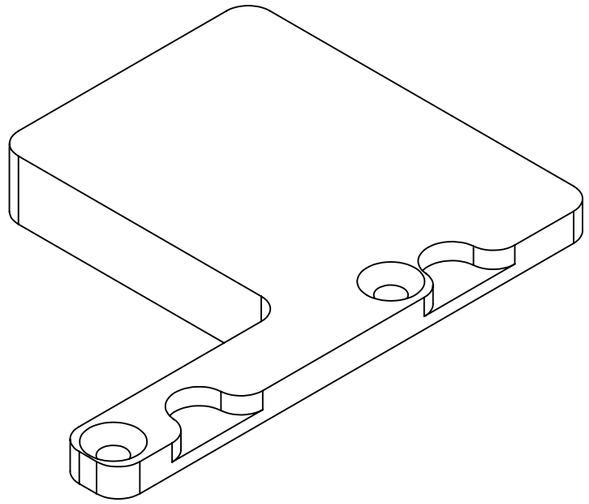

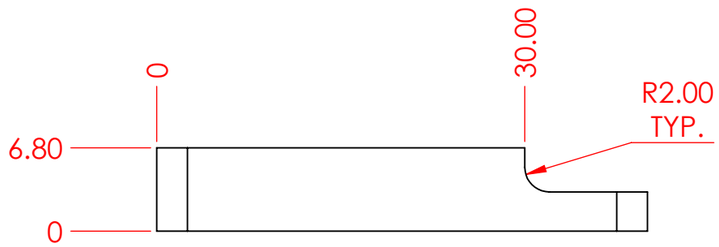

NOTE:
1. THIS DRAWING IS ACCOMPANIED BY DIGITAL 3D SOLID MODEL OF PART.
   UNLESS OTHERWISE SPECIFIED DIMENSIONS MUST BE TAKEN FROM 3D MODEL.
2. MATERIAL: AL6061-T6.
3. BREAK ALL BURRS AND SHARP EDGES.
4. FINISH: CONVERSION COATING PER MIL-5541, TYPE II, CLASS 3 (CLEAR).
5. ALL MATERIALS MUST MEET EU DIRECTIVE 2011/65/EC (RoHS),
   CHINA SJ/T 11363-2006 (CHINA-RoHS) & EU REGULATION (EC) 1907/2006 (REACH).

SolidRun

TITLE M.2 HEAT BLOCK

PART NO. MCH00531

SCALE: NTS

SHEET 1 OF 1 | REV 03 | SIZE A3 | DIM mm

PROJECT: *HB-IIOT*

UNLESS OTHERWISE SPECIFIED ALL DIM ARE IN mm:
TOLERANCES:
LINEAR: ± 0.1
HOLES: + 0.1
B.HOLES: ± 0.1
ANGLES: ± 0.2 deg

ROUGHNESS:
(NX) NX N7

	NAME	DATE	SIGN.
DRAFT	L.G.	13.02.2024	
DESIGNED	L.G.	13.02.2024	
CHECKED	Y.SH.	13.02.2024	
APPROVED	Y.SH.	13.02.2024	